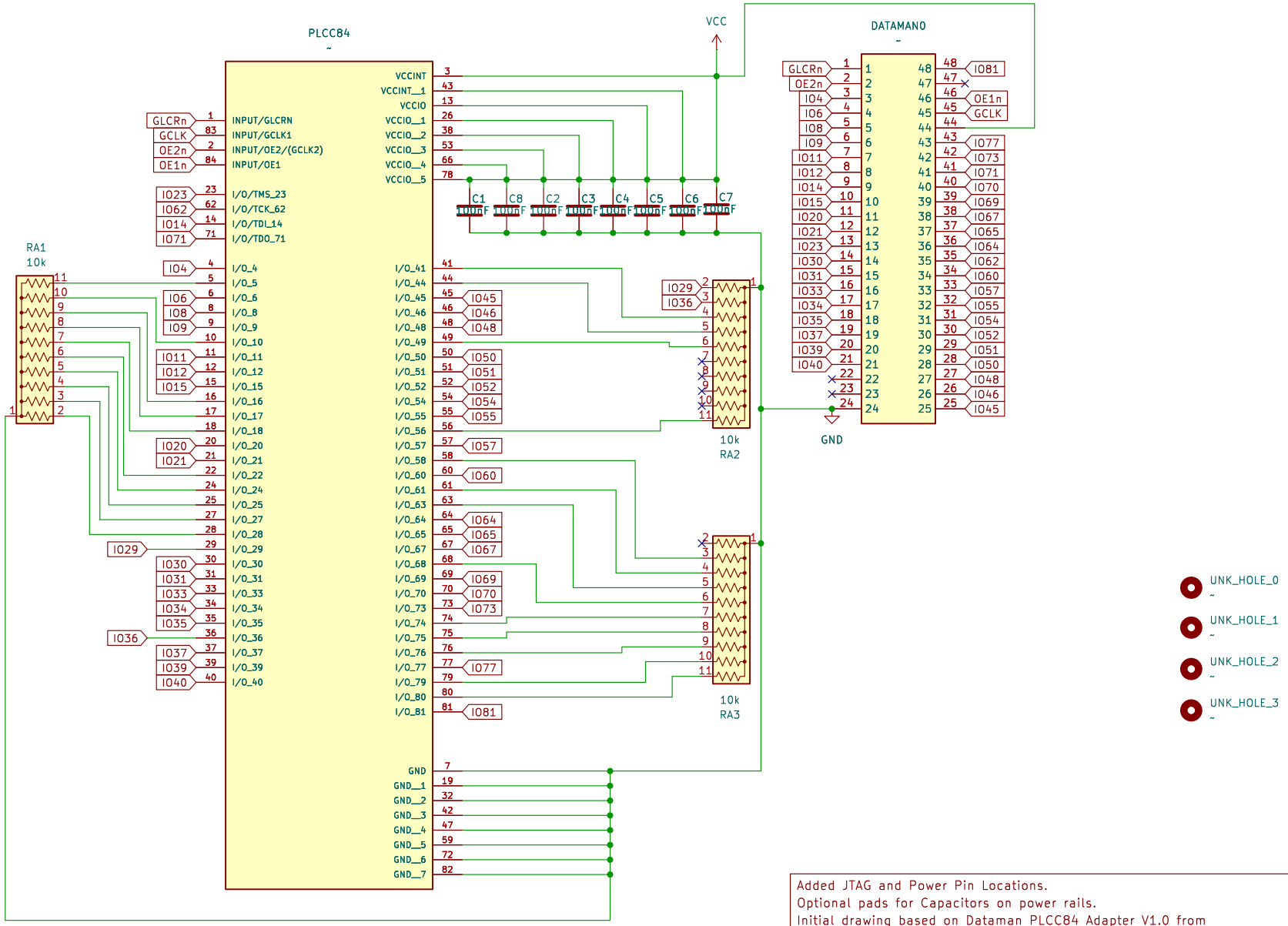

Added JTAG and Power Pin Locations.
Optional pads for Capacitors on power rails.
Initial drawing based on Dataman PLCC84 Adapter V1.0 from
https://blog.system11.org which is for EPM7064 PLCC84 variant

LiveboxAndy

Sheet: /
File: EPM7128 Adapter.kicad_sch

Title: Dataman Adapter for EPM7128SLC84

Size: A4	Date: 2026-03-24	**Rev: 1.1**
KiCad E.D.A. 9.0.8		Id: 1/1